SERVICE MANUAL

ELENBERG LTV-1521

更改标记	更改数量	更改单号	描 述	签 名	更改日期

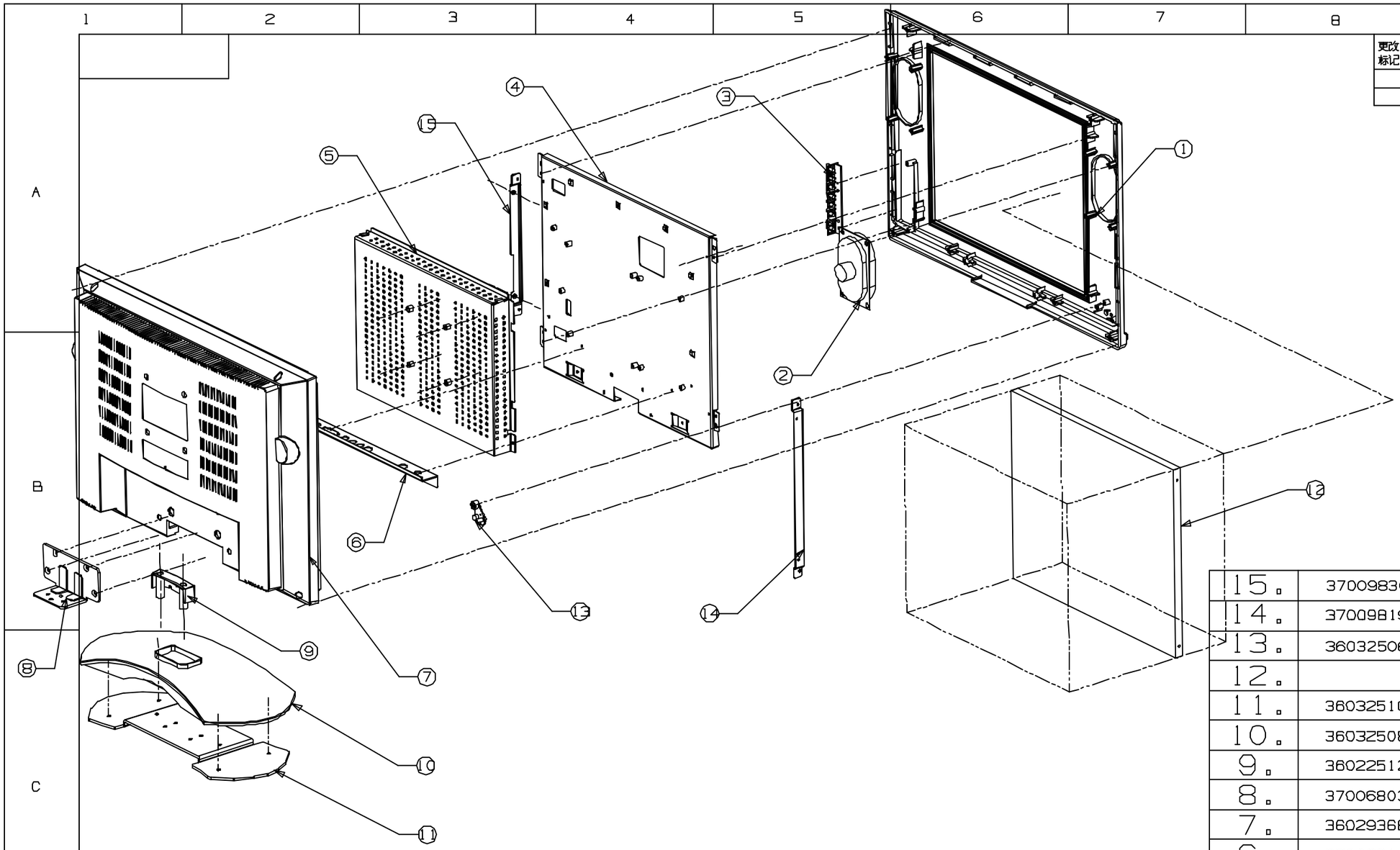

Location	Parts NO.	Parts Name	QTY.
15.	37009830	Bracket(right)	1
14.	37009819	Bracket(left)	1
13.	36032506	Lens	1
12.		Screen	1
11.	36032510	Base Board	1
10.	36032508	Base	1
9.	36022512	Rotate Cover	1
8.	37006803	Connection Board	1
7.	36029368	Cabinet Back	1
6.	37009814	Interface Board	1
5.	37009832	Shield Box	1
4.	37009817	Bracket	1
3.	36032509	Functional Knob	1
2.		Speaker	2
1.	36032541	Cabinet Front	1

型号 | 模型名 | 数量/台

版本号

日底图总号

底图总号

日期 | 签名

标记 | 数量 | 分区 | 更改单号 | 签名 | 日期

设计
审核
工艺
标准化
批准

KLC-1521QS
ASSEMBLY

等级标记 | 质量 | 比例

第 张 | 共 张

格式(1) 1 | 2 | 3 | 4 | 5 | 6 | 7 | 8 | 9 | 幅面:A2 10 KONKA

Spare Parts List (LTV -1521)

Item	Description	QTY	Part № (Код ЗЧД=Номер ЗЧД)
1	CABINET FRONT	1	36032541
2	SPEAKER	2	
3	FUNCTIONAL KNOB	1	36032509
4	BRACKET	1	37009817
5	SHIELD BOX	1	37009832
6	INTEFACE BOARD	1	37009814
7	CABINET BACK	1	36029368
8	CONNECTION BOARD	1	37006803
9	ROTATE COVER	1	36022512
10	BASE	1	36032508
11	BASE BOARD	1	36032510
12	SCREEN	1	
13	LENS	1	36032506
14	BRACKET(LEFT)	1	37009819
15	BRACKET(RIGHT)	1	37009830
	REMOTE HANDSET		KK-Y298
	AC POWER JSI-150206(LF)-		34003794
	TUNER AFT1/3100		32001259
	SPEAKER YDT6090N-6rc(8Ω/4W)		29001071
	TOUCH SWITCH KFC-A06-L4-4.5×6.5-4.3B		23000611
	IR REMOTE CONTROL RECEIVER		21000391
	SMD ZENERDIODE BZV55-C/8V2-PHILIPS		16002081
	FUSE 20N-020H/L-2A/250V		27001227
	15"L.C.D SVA150XG04TB		31003232
	MAIN BOARD 090*KLC-1521QS-2-01/00/A		35009717
	KEY BOARD 090*LC-TM1509S01/00/A		35009707
	REMOTE CONTROL RECEIVER BOARD		35009433
	REMOTE CONTRO BOARD 090*Y27401/01-T/A		35009435
	FRONT CABINET200*KLC1521US10/102P		36032541
	BACK CABINET 202*KLC1521US10/102P		36032505
	MODEL PLATE 412*KLC-1521QS10/02-KONKA		36033736
	*FUNCTION BUTTON 291*KLC1521US10/101D		36032509
	*POLYFOAM L 300*KLC1521US10/00		39018938
	*POLYFOAM R 300*KLC1521US20/00		39018943
	*PACKINGBAG310*080080/034R-800X800X0.025		39011083
	*CARTON BOX 510*KLC-1521QS10/03		39020551
	*MANUAL570*KLC-1521QS/02-ENGLISH		39020552
	SOCKET 21 SCART CS-2110VEP		25002363
	VGA SOCKETDP-001-01EP		25002364
	*STEREO JACK CKX-035-114C-01EP		25002362

IMPORTANT SERVICE SAFETY INFORMATION

Operating the receiver outside of its cabinet or with its back removed involves a shock hazard. Work on these models should only be performed by those who are thoroughly familiar with precautions necessary when working on high voltage equipment.

Exercise care when servicing this chassis with power applied. if carelessly contacted, can cause serious shock or result in damage to the chassis. Maintain interconnecting ground lead connections between chassis, escutcheon, picture tube dag and tuner when operating chassis.

When it is necessary to make measurements or tests with AC power applied to the receiver chassis, an Isolation Transformer must be used as a safety precaution and to prevent possible damage to transistors. The Isolation Transformer should be connected between the TV line cord plug and the AC power outlet.

It is important to maintain specified values of all components and anywhere else in the received that could cause a rise in operating supply voltages. No changes should be made to the original design of the receiver.

Components shown in the shaded areas on the schematic diagram and/or identified by in the replacement parts list should be replaced only with exact factory recommended replacement parts. The use of unauthorized substitute parts man creates may create shock, fire, or other hazards.

Before returning the receiver to the user, perform the following safety checks:

1. Inspect all lead dress to make certain that leads are not pinched or that hardware is not lodged between the chassis and other metal parts in the receiver.
2. Replace all protective devices such as non-metallic control knobs, insulating fish papers, cabinet backs, adjustment and compartment covers of shields, isolation resistor-capacitor networks, mechanical insulators etc.
3. To be sure that not shock hazard exists, a check for the presence of leakage current should be made at each exposed metal part having a return path to the chassis (antenna, cabinet metal, screw heads knobs and/or shafts, escutcheon, etc.) in the following manner.

Plug the AC line cord directly into a 110V/220V/240V, AC receptacle. (Do not use an Isolation Transformer during these checks.) All checks must be repeated with the AC line cord plug connection reversed. (If necessary, a non-polarized adapter plug must be used only for the purpose of completing these checks.)

PLEASE READ BEFORE ATTEMPTING SERVICE

1. Use an Isolation Transformer when performing any service on this chassis.
2. Never disconnect any leads while receiver is in operation.
3. Disconnect all power before attempting any repairs.
4. Do not short any position of the circuit while the power is on.
5. For safety reasons, replace components any with identical replacement parts (SEE PARTS LIST).
6. Before alignment, warm up the TV for at least 30 minutes.
7. When removing a PCB or related component, after unfastening or changing a wire, be sure to put the wire back in its original position.
8. Inferior silicon grease can damage IC's and transistors. When replacing IC's and transistors, use only specified silicon grease. Remove all old silicon when applying new silicon.
9. Before removing the anode cap, discharge eletricity because it contains high voltage.

A. SPECIFICATION

System : PAL- D/K，I，B/G；SECAM-L/L’，B/G，D/K
Channel : 45.25MHz～855.25MHz
IF Frenquency Video： 38.9MHz
Chroma： 34.47MHz
Sound： 32.4 MHz（DK）
33.4MHz（BG）
32.9 MHz（I）
Audio output power 10%THD 1W×2
Antenna Impedance 75Ω(Unbalance)
Power Consumption 36W
Power Supply : AC~100-240V,50/60Hz

KLC-1521QS

item	Port list
1	RF cable
2	SCART
3	PC VGA input
4	Y、Pb/Cb、Pr/Cr
5	Video
6	Audio input
7	Headphone audio output
8	Power port

ADJUSTMENT MANUAL

TEST NOTE

1. Please follow the pointed test steps and choose the right test equipment to conduct adjustment, otherwise good effect of Unit could not be obtained. The unit should be warmed up for 30 minutes before adjustment and every parameter should be adjusted repeatedly till the optimum value obtained, the pointed voltage value should be ensured during test to get satisfied test result.

2. Test environment
   1) Temperature 15°C～35°C
   2) Relative Humidity 45%～75%
   3) Air pressure 86KPa～106KPa

3 Test equipments（The following equipment should be calibrated before testing）

1) Computer	1 set
2) Multi-meter (VICTOR VC9801)	1 set
3) Video Signal Generator (Chroma Model 2227/2327)	1 set
4) Color Analyzer (Chroma Model 7120)	1 set
5) DDC card (DYNACOLOR, INC D8330)	1 slice
6) TV Video Signal Generator (FLUKE PM54200)	1 set

4 Factory mode adjustment

4.1 Enter factory mode adjustment

Using the remote control, press Menu button once first , then press RECALL button five times,and you can see manufacture menu on the LCD panel.

4.2 Factory menu operation method

Press the PROG ▲/▼ button to selection the sub menu of factory menu（including F、E、UOCⅢ、Temp）, and press the VOL ► to enter the sub menu and setting the value.

4.3 Exit the factory menu

Press the MUTE button again and again or turn off the TV, it can exit the factory menu.

4.4 AGC adjustment

In TV mode, receive 60dB split field signal.Enter factory mode menu “UOCⅢ” item, press PROG ▲/▼ to select “RF AGC” ，then use VOL◄/► to adjust the item until the voltage of Pin 1 of N100 to be about 2.5V±0.2V, then noise wave of the picture point disappears.

4.5 White calibration adjustment

4.5.1 Receive black or white signal under AV or PC mode, adjusting brightness and contrast to set the brightness to 15Nit in dark area and 90 Nit in bright area.

4.5.2 Adjust white balance.Press MENU button once, then press RECALL button five times to enter factory menu, select “Temp” Menu,

Adjust	Red	0-100
	Green	0-100
	Blue	0-100

4.5.3 Adjusting chromaticity coordinates of black and white to fit the requirement, or plug automatic calibration system to adjust white calibration automatically.

BLOCK DIAGRAM

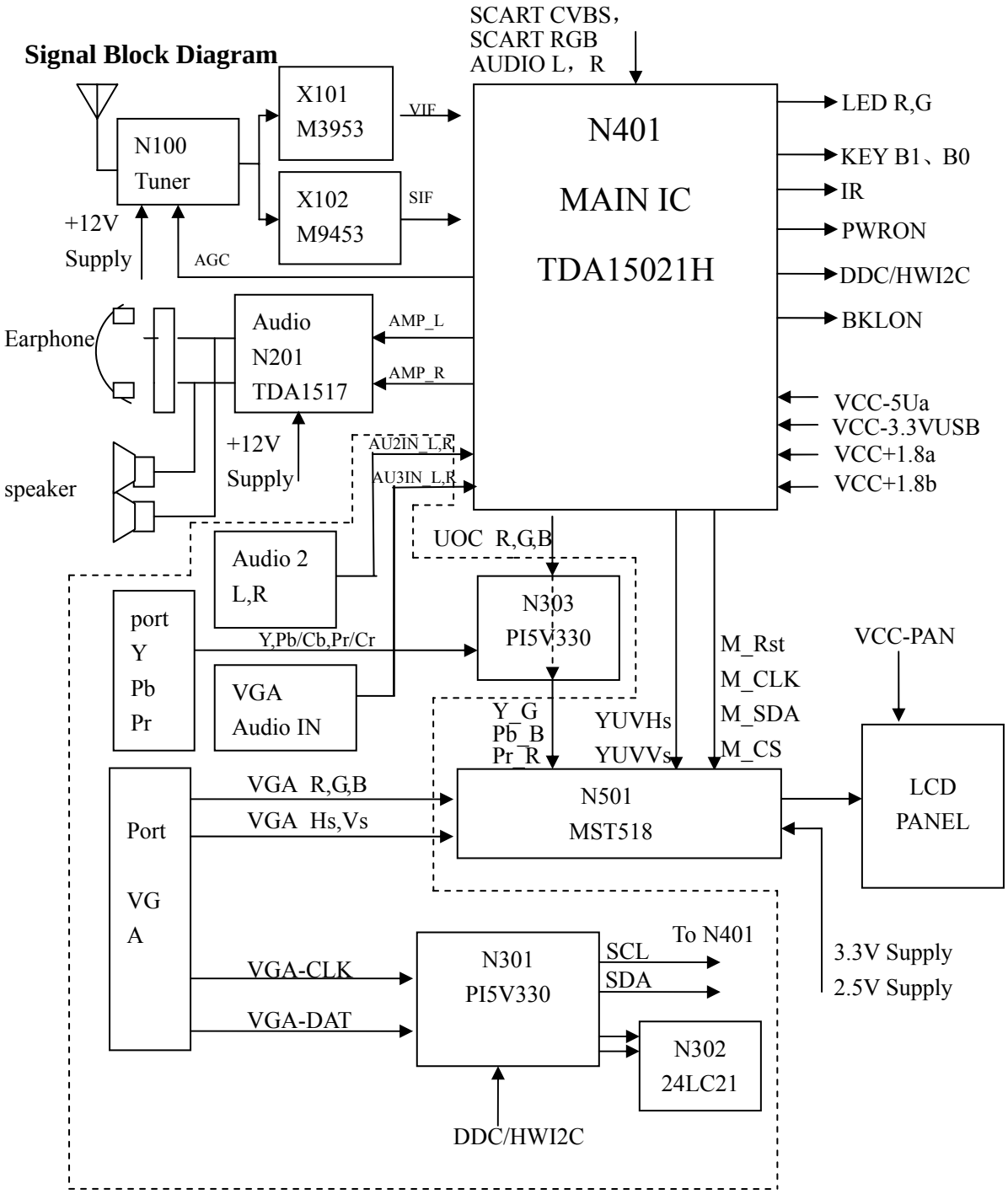

Signal Board Power Digram

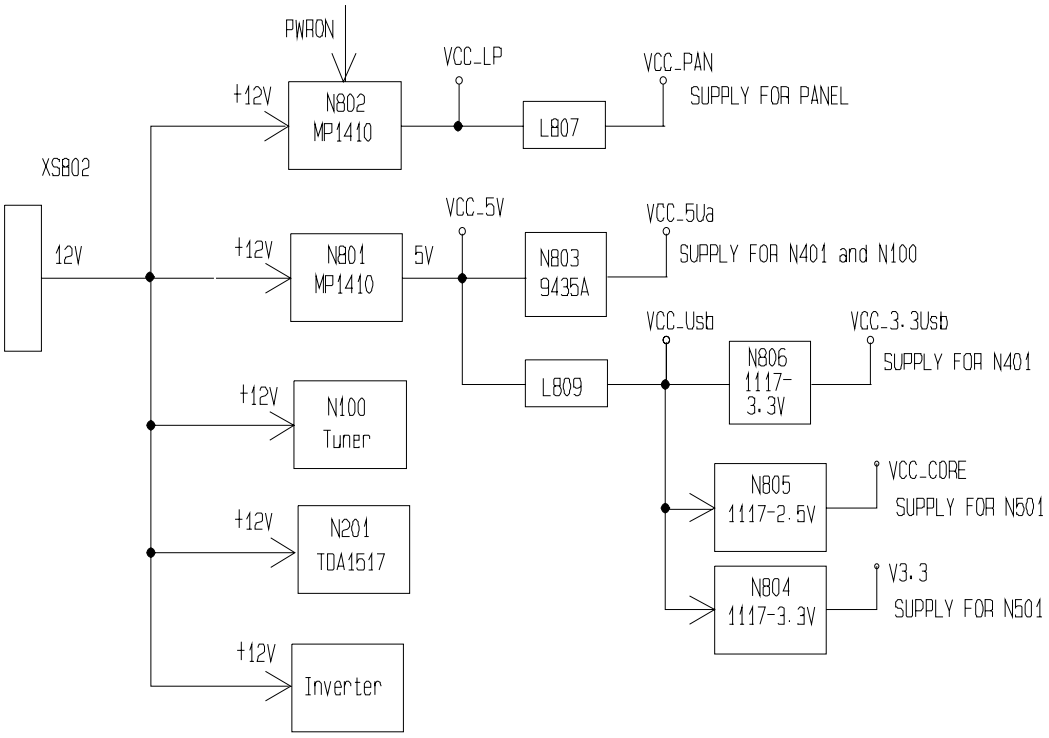

IC BLOCK DIAGRAM

1 N401(TDA15021H1)

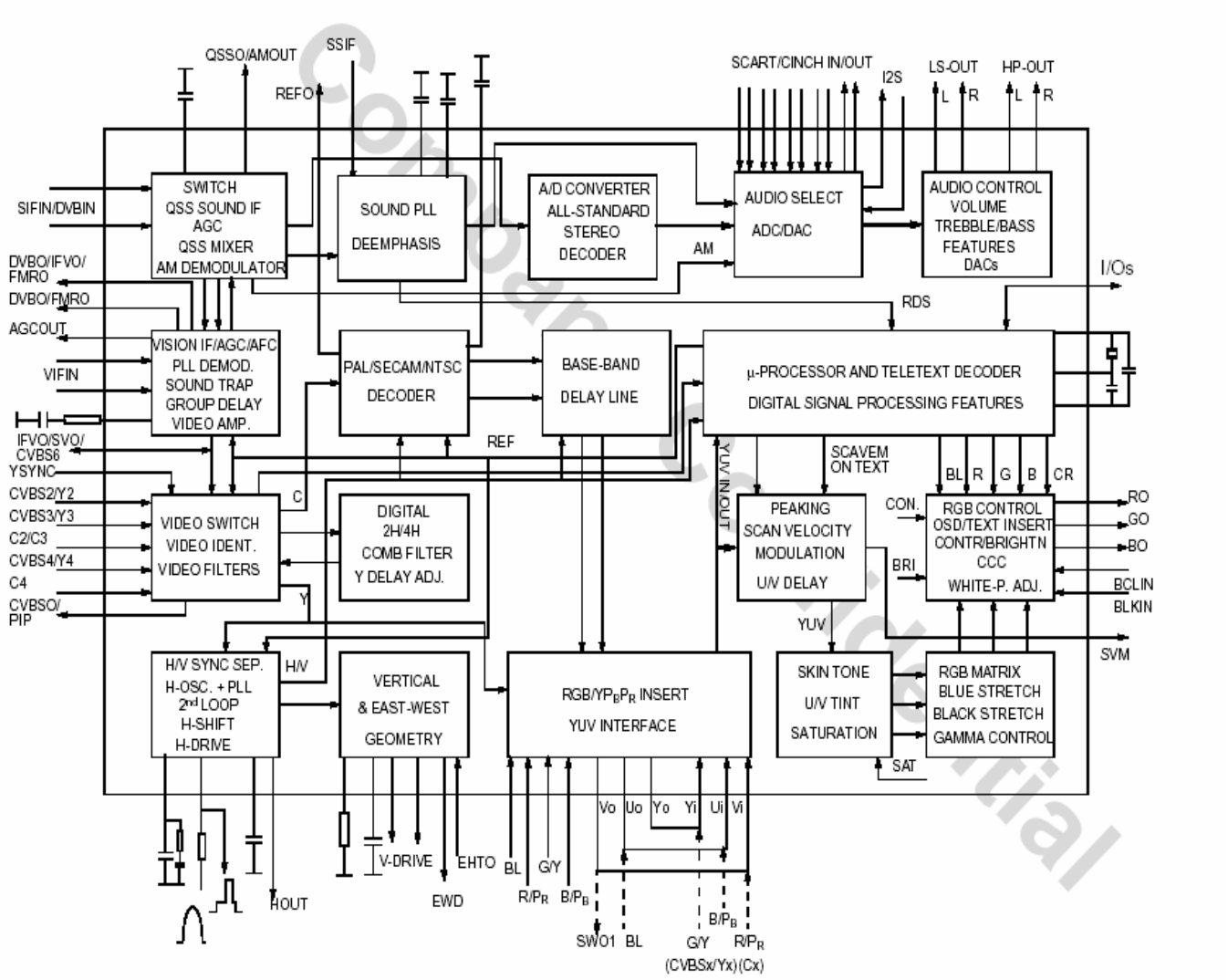

2 N501 (MST518)

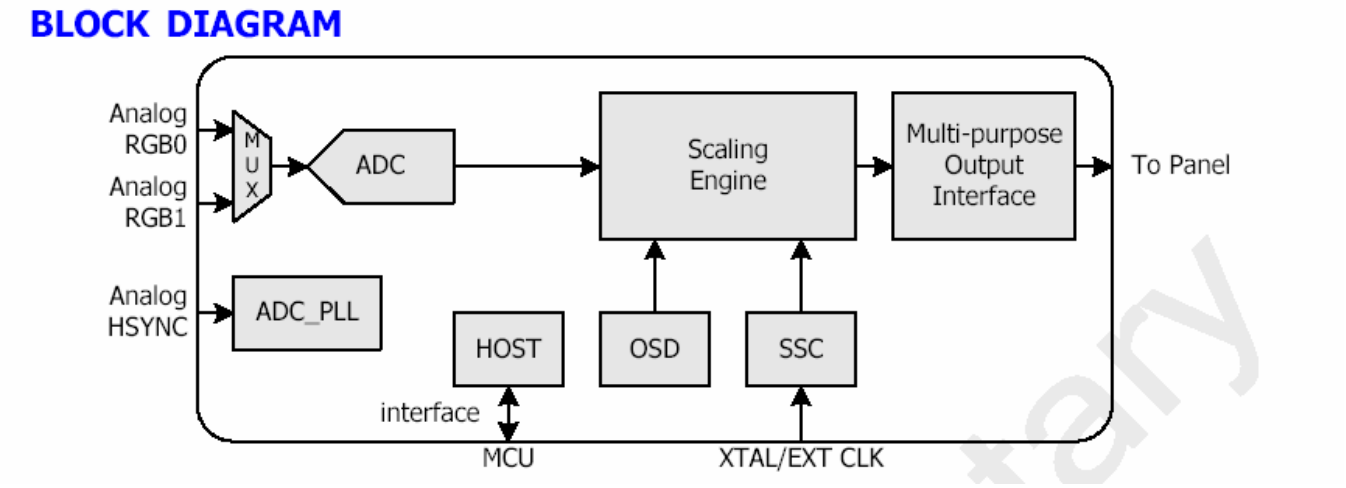

Trouble Shooting

Key IC list

Item	Type	Maker	Package	Circuit No.	Qty.
1	TDA15021H1	Philips	QFP128	N401	1
2	MST518	MSTAR	PQFP160	N501	1
3	24LC32A	MICROCHIP	SOIC-8	N402	1
4	24LC21A	MICROCHIP	SOIC-8	N302	1
5	MP1410ES-SOIC-8	MPS	SOIC-8	N801,N802	2
6	FDS9435A	FAIRCHILD	SOIC-8	N803	1
8	TDA1517	PHILIPS	SIL9MPF	N200	1
9	FSAV330	FAIRCHILD	TSSOP-16	N301	1
	TS5V330	TI			
11	1117-3.3V	BCD	SOT223	N804,N806	2
12	1117-2.5V	AAC	SOT223	N805	1
14	Tuner AFT1/3100G	Qingjia		N100	1

Start order：

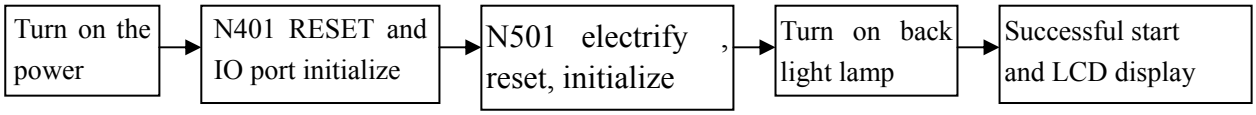

1)Verify the state of TV set.Please switch the TV on ,then verify the LED color. Red is standby state and green is working state.

2)Checking Supply Power.If the color of LED is yellow,the power supply for signal board 。N801 supply 5V and N802 supply 3.3V,N804、N806 supply 3.3V power(Test the PIN 2).N805 supply 2.5V(Test the PIN 2),D803 supply 8.3V,V401 and V402 supply 1.8V. All these are for main IC N401,N501.

3)After turning on the power, if blank screen appears (no back light lamp), just press POWER button several times, if blank screen still there.Check if the voltage of every power supply is normal.

4)Check if the crystal oscillator X501(14.318180MHz) X401(24.576MHz) oscillate or not, and oscillate frequency is right or not.

5)Back light control signal (BKLON) of XS801 has high level (about 2.5V) or not, if not, check whether fault soldered or short circuit happened。

6) If back light lamp is on while there is no display,check N407 and N501′s reset circuit and the output of the oscillator to confirm the CPU and SCALER are working or not.If RGB is abnormal,check N501;If RGB is working correctly and the other channel is abnormal ,please check N501.

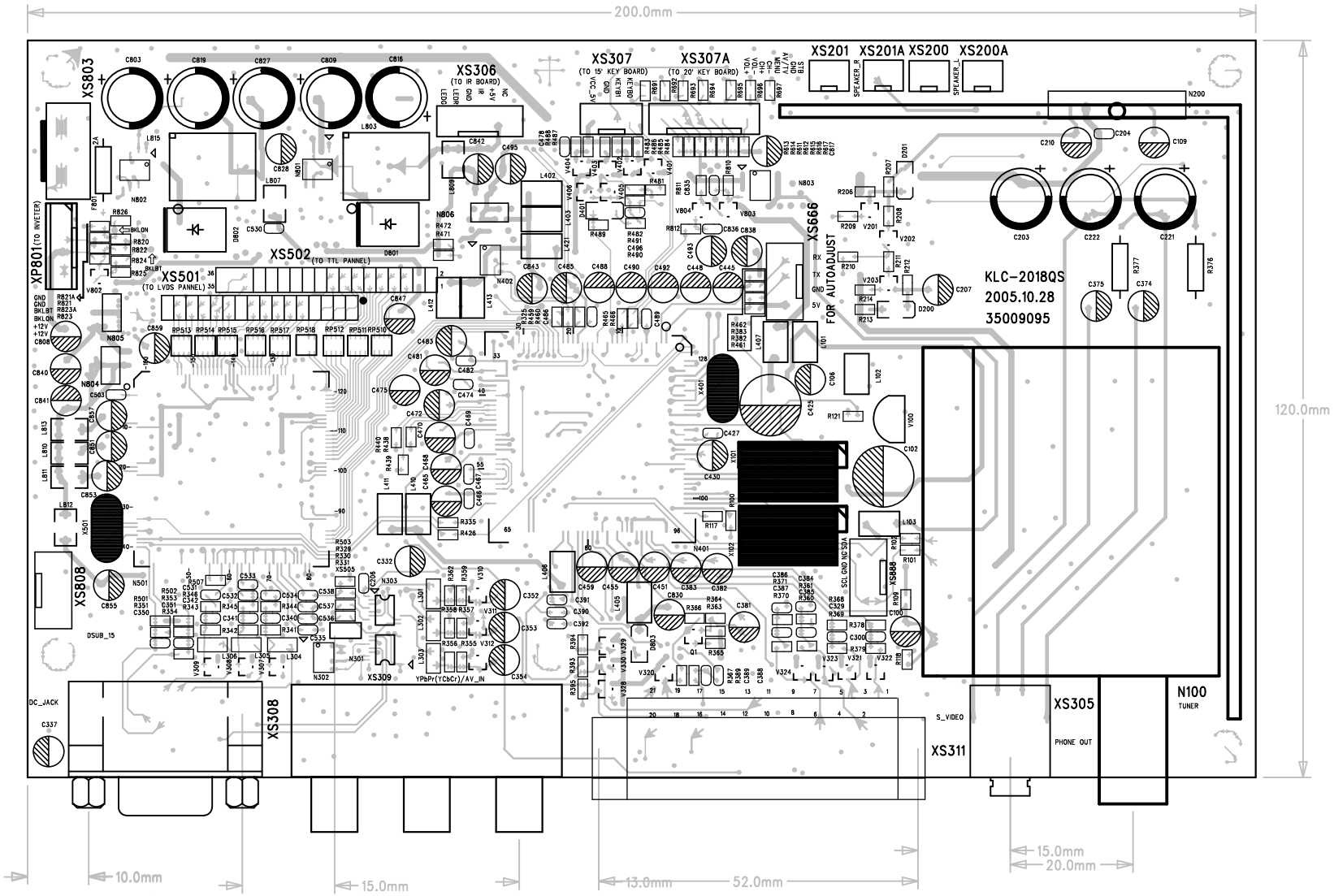

35009095.pcb - Fri Mar 17 11:33:13 2006

PDF 文件以 "PDF 制作工厂" 试用版创建 http://www.fineprint.com

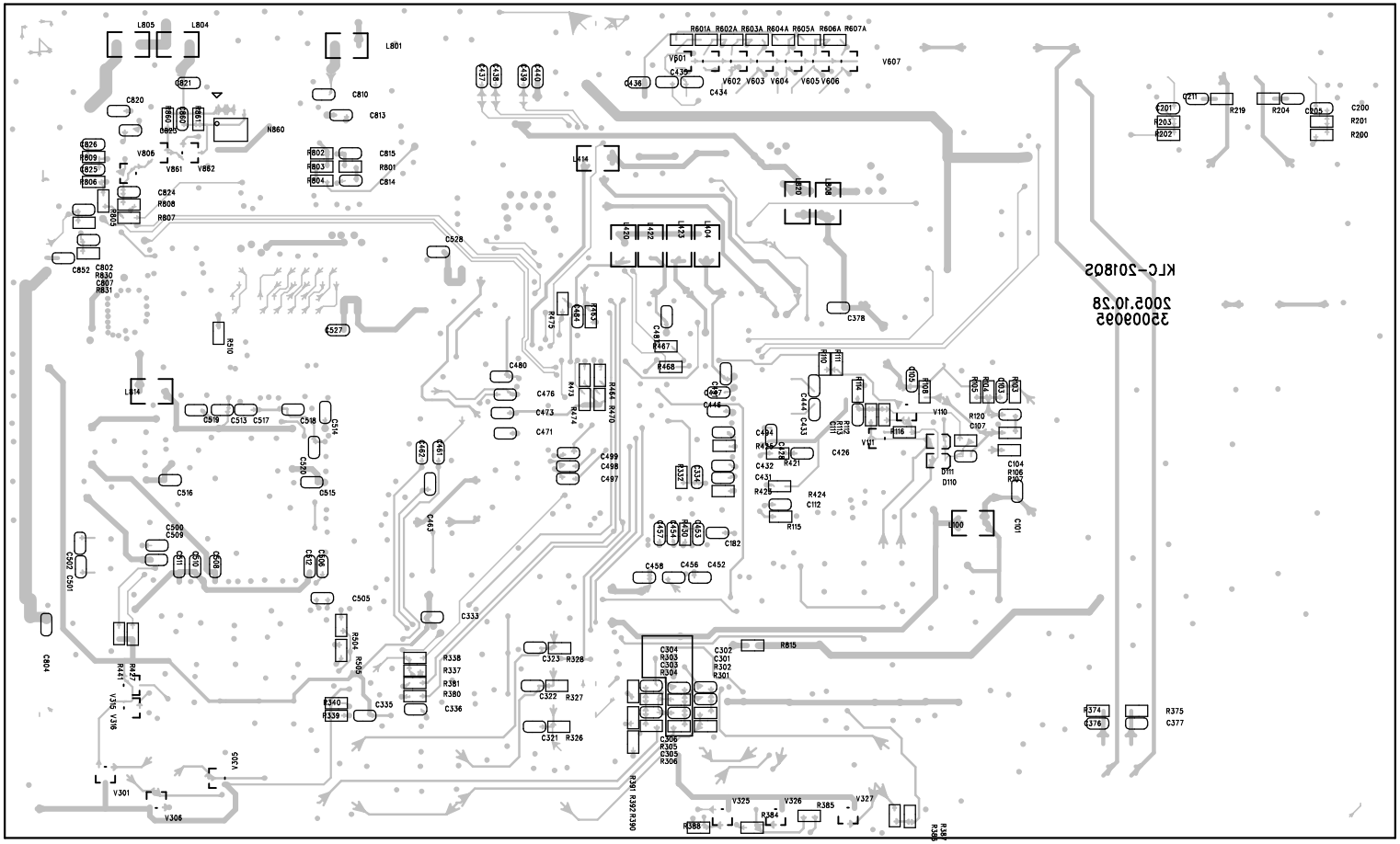

35009095.pcb - Fri Mar 17 11:34:37 2006

PDF 文件以 "PDF 制作工厂" 试用版创建 http://www.fineprint.com

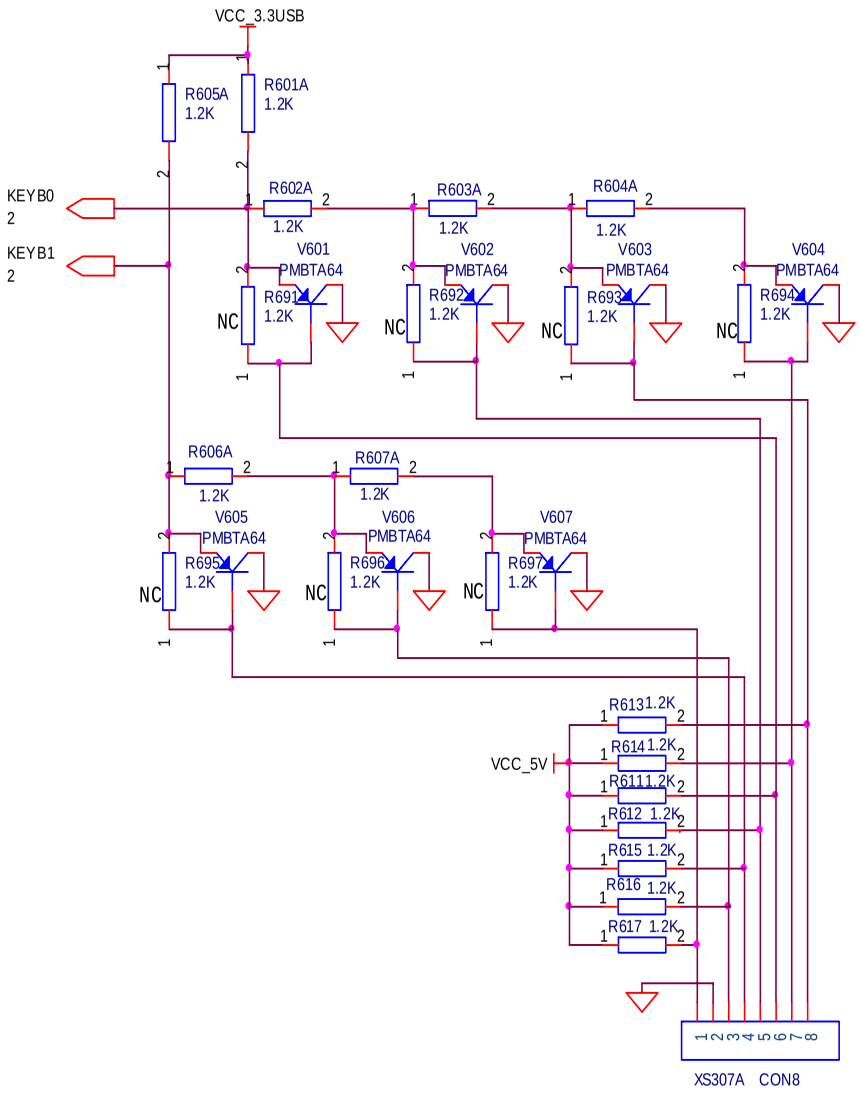

Title	KEY_BOARD	
Size A	Document Number	Rev <Rev Code>
Date: Monday, December 05, 2005	Sheet 1 of 1	

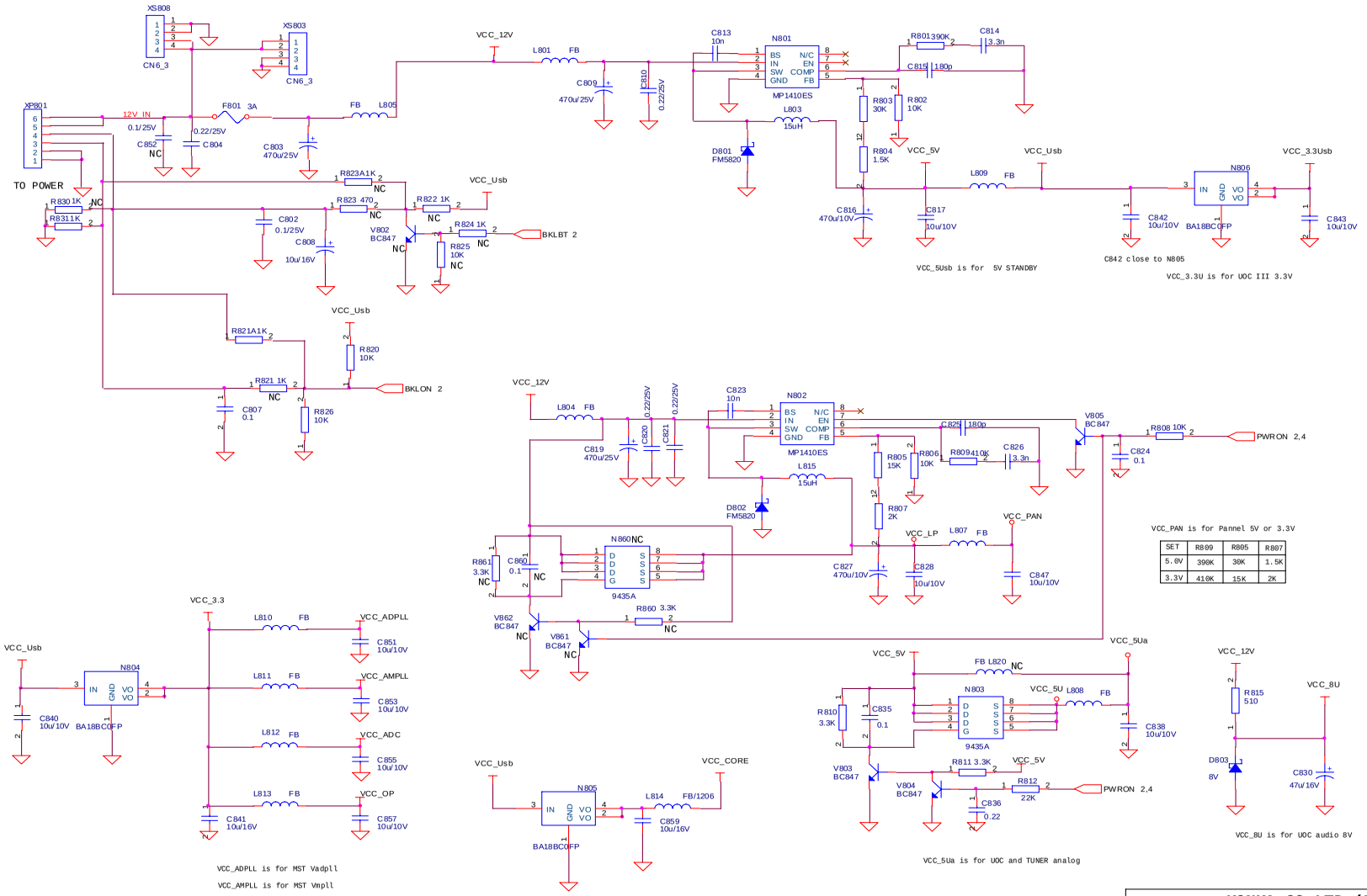

SET	R809	R805	R807
5.0V	390K	30K	1.5K
3.3V	410K	15K	2K

KONKA CO.LTD (NDA)		
Title <Title>	POWER	
Size A3	Document Number	Rev 1.0
Date: Monday, December 05, 2005	Sheet 5 of 5	

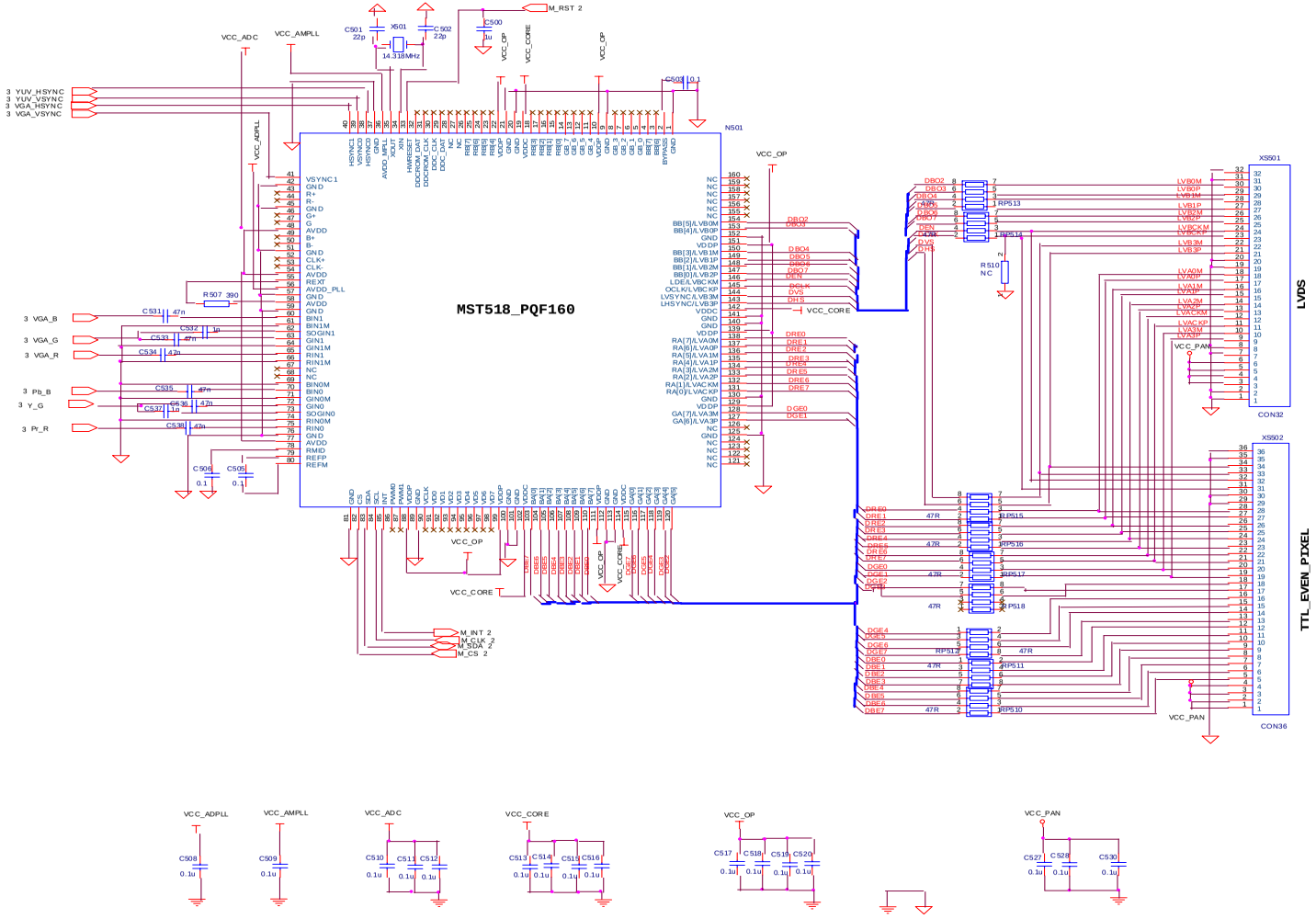

Title	SCALER_MST518		
Size C	Document Number		Rev
Date: Monday, December 05, 2005	Sheet 1 of 5		

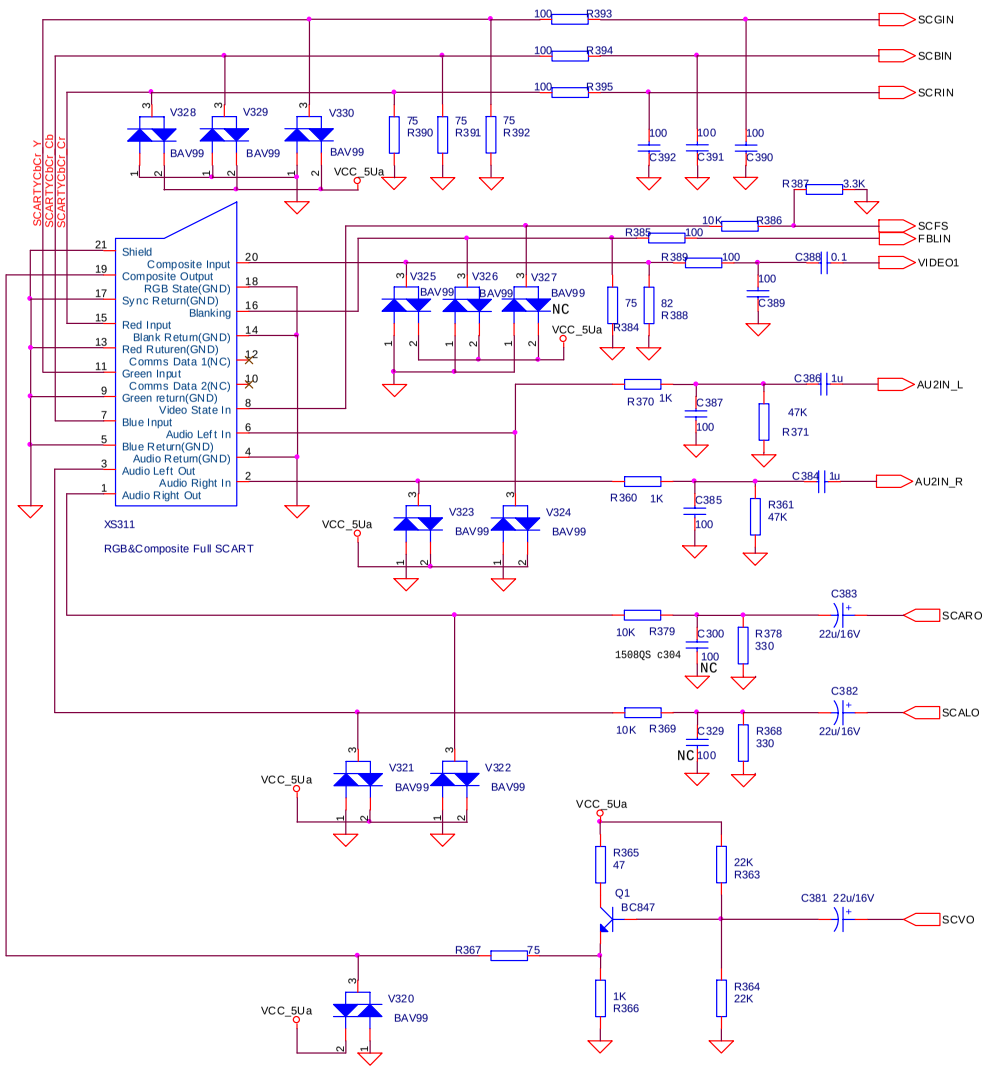

Title	SCART		
Size B	Document Number		Rev <RevCode>
Date: Monday, December 05, 2005		Sheet 1 of 1	

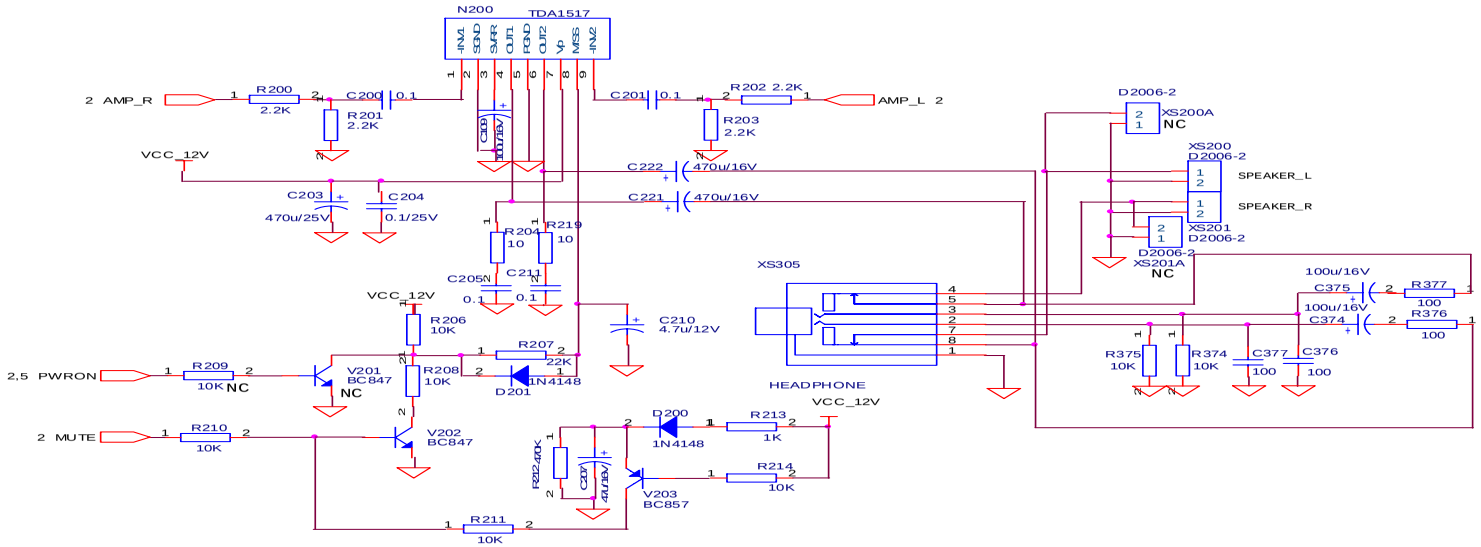

Audio AMP

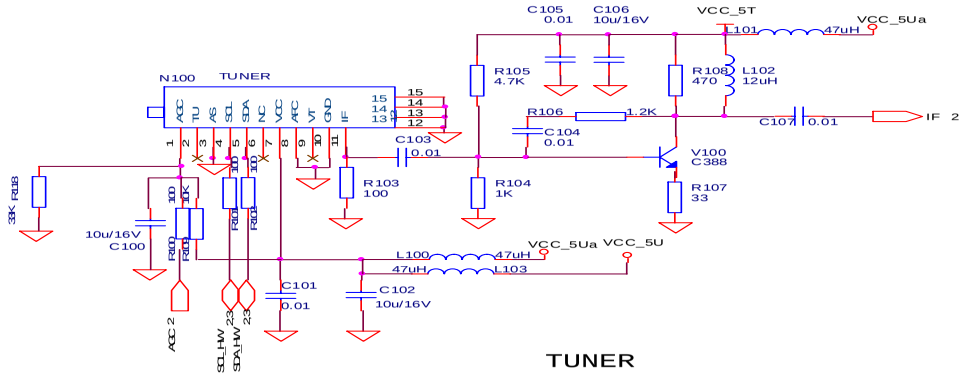

TUNER

Title	<Title>	KONKA CO.LTD (NDA) TUNER & AMP
Size A3	Document Number	Rev <RevCode>
Date: Monday, December 05, 2005	Sheet 4 of 5	

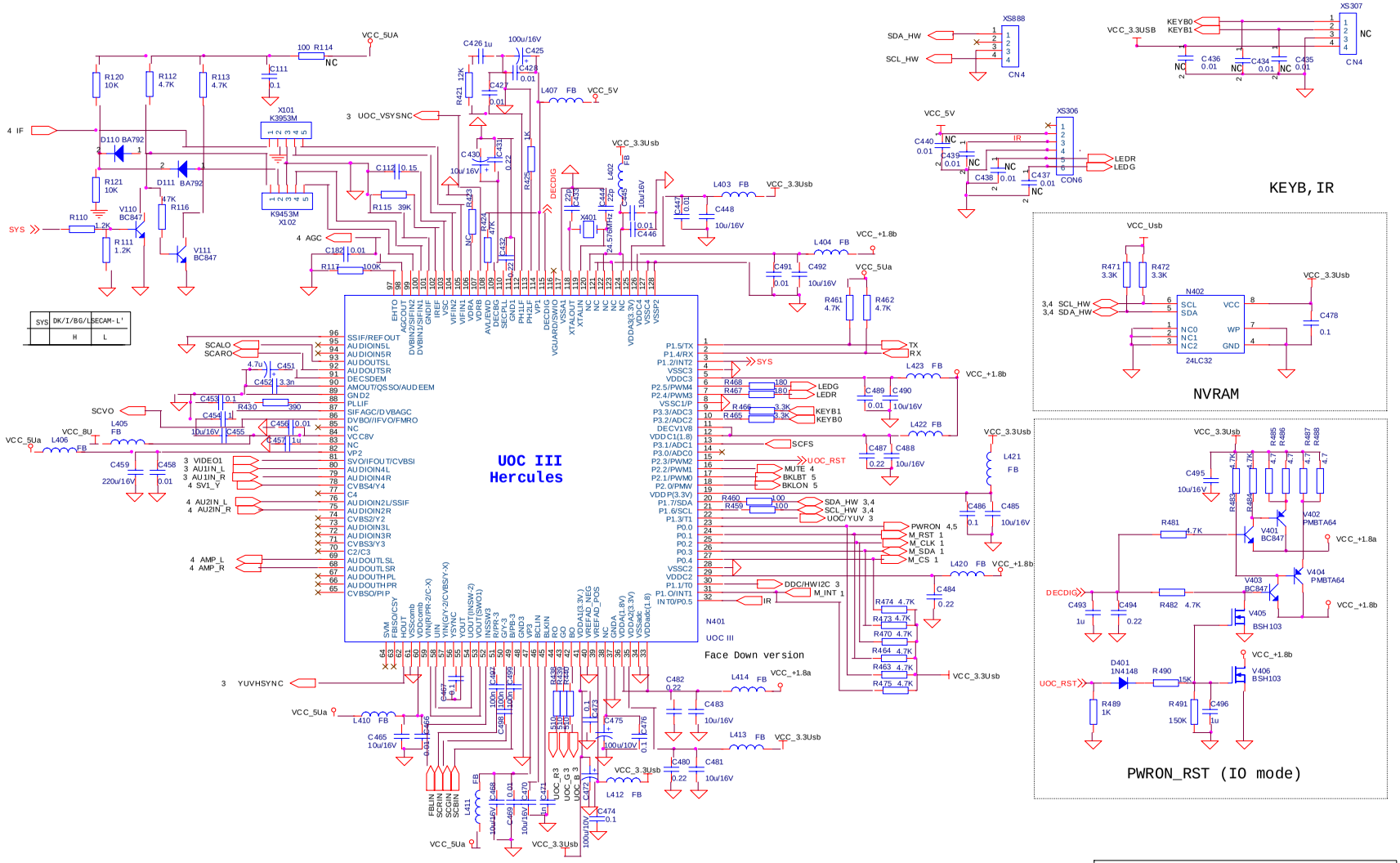

KONKA CO.LTD (NDA)		
Title <Title>	UOC III	
Size A3	Document Number	Rev 1.0
Date: Monday, December 05, 2005	Sheet 2 of 5	

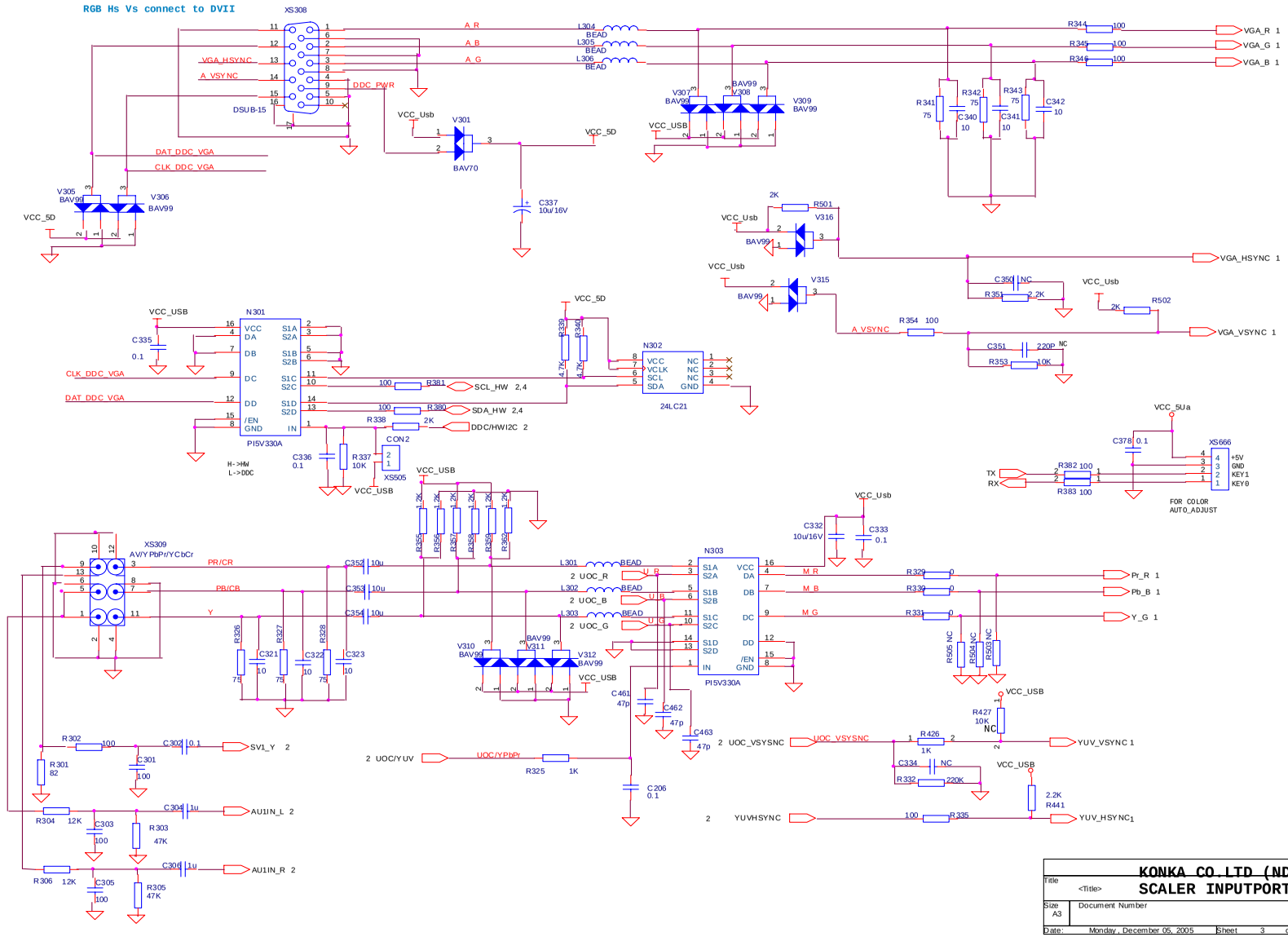

Title	KONKA CO.LTD (NDA)	
	<Title> SCALER INPUTPORT	
Size A3	Document Number	Rev 1.0
Date: Monday, December 05, 2005	Sheet 3 of 5	

Appendix 1 Пиложение 1.

Electrical Outgouing Inspection Specification TFT LCD

Спецификация для электрических проверокЖК панелей

1. Conditions Условие проведения проверок

viewing distance	60 ~ 80 cm
ambient illumination	300 ~ 400 Lux (nominal 350 Lux)
viewing angle	90 градусов к поверхности панели (45' лево/45'
display pattern	Pure R, G, B, Black and White
inspection area	active area

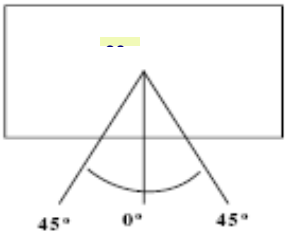

2. Типы Дефектов

Defect Type	**Accept**
Bright dot Яркий субпиксель (имеет большую яркость чем соседние) a) **random** случайный b) **two adjacent** два вместе c)**three adjacent** три вмете	a) N ≤ 1 b) N = 0 c)N = 0
Dark dot Темный субпиксель (имеет чёрный цвет) a) **random** случайный b) **two adjacent** два вместе (Fig. 2) c) **three adjacent** три вместе	a) N ≤ 8 b)N ≤ 2 c)N = 0
Low dot random Не яркий (имеет яркость такую же как соседние точки/субпиксели либо меньшую) субпиксель, случайный	N ≤ 8
Minimum distance between defects, (Fig.1)	L ≥ 5mm

Fig 1.

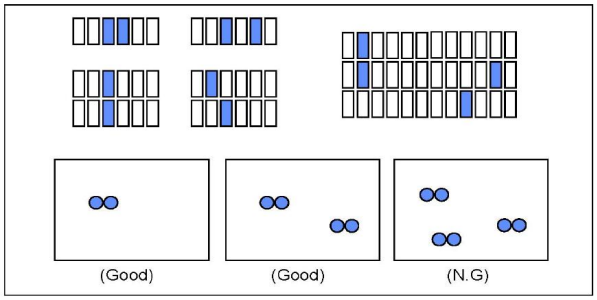

Fig 2.

Внутренние дефекты матрицы.

Пятна яркости.

Допускаются пятна яркости *по краям* экрана размером **не более 20 мм** в длину и **8 мм** в ширину.

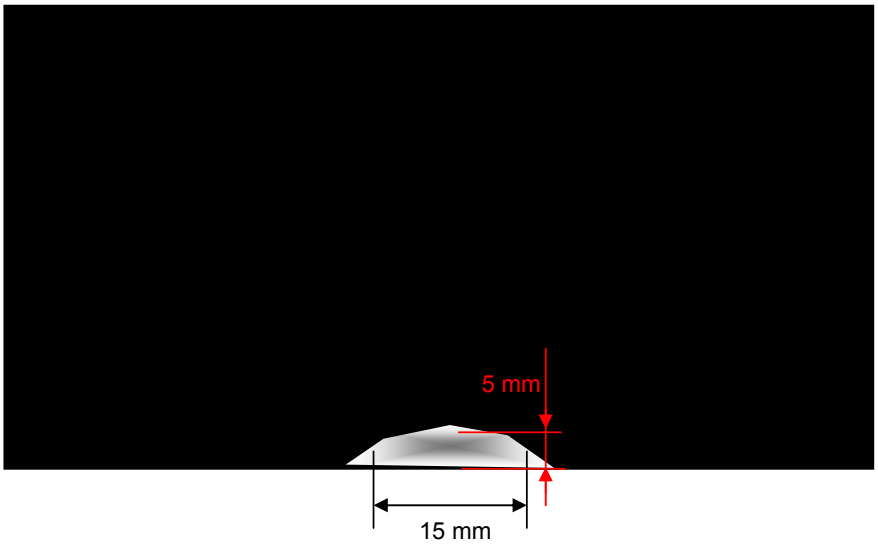

Appendix 1 Пиложение 1.

Electrical Outgouing Inspection Specification **TFT LCD BOE**

Спецификация для электрических проверокЖК панелей

1. Conditions Условие проведения проверок

viewing distance	30 ~ 50 cm
ambient illumination	300 ~ 700 Lux (nominal 500 Lux)
viewing angle Угол обзора (осмотра)	Угол по вертикали ±25°, по горизонтали ±40° Vertical viewing angle ±25°, horizontal viewing angle ±40°
display pattern проверочное изображение	Pure R, G, B, Black and White
inspection area зона проверки	active area/ активная зона

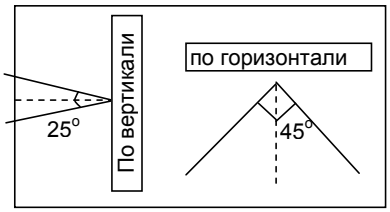

2. Типы Дефектов

Defect Type	**Accept**
Bright dot Яркий субпиксель (имеет большую яркость чем соседние) a) **random** случайный b) **two adjacent** два вместе c)**three adjacent** три вмете	a) N ≤ 6 b) N ≤2 c)N = 0
Dark dot Темный субпиксель (имеет чёрный цвет) **a) random** случайный **b) two adjacent** два вместе **(Fig. 2)** **c) three adjacent** три вместе	a) N ≤ 6 b)N ≤ 2 c)N ≤ 1
Dark dot + Bright dot Яркий + тёмный субпиксель	N ≤ 7
Low dot random Не яркий (имеет яркость такую же как соседние точки/субпиксели либо меньшую) субпиксель, **a) случайный** **b) two adjacent два вместе** **c) three adjacent три вместе**	a) N ≤ 6 b)N ≤ 2 c)N ≤ 1
Minimum distance between defects, (Fig.1)	L ≥ 5mm

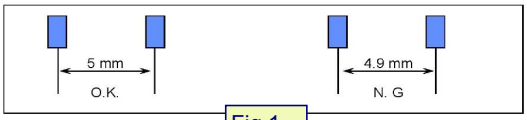

Fig 1.

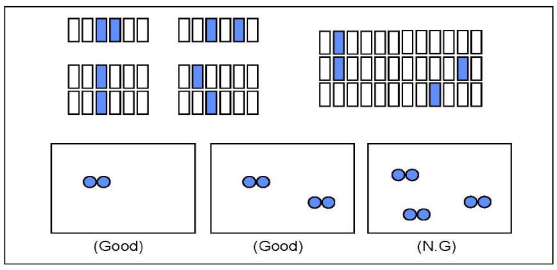

Fig 2.

Внутренние дефекты матрицы.

Пятна яркости.
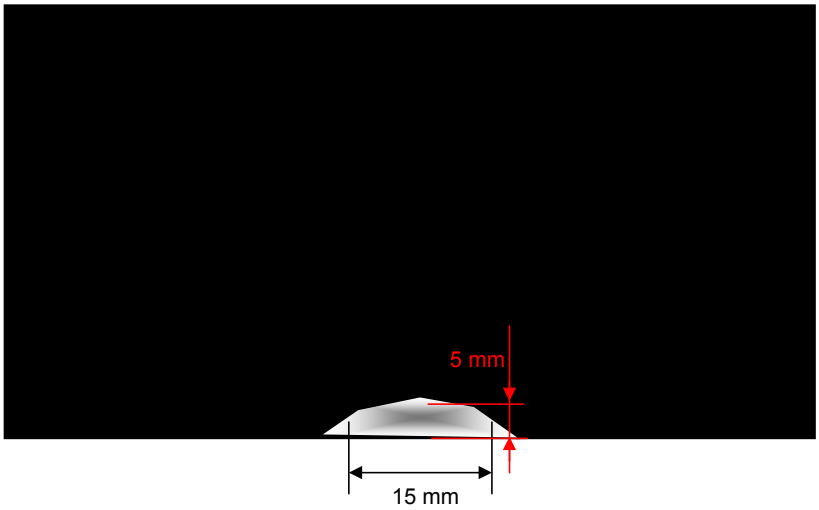
Допускаются пятна яркости *по краям* экрана размером **не более 20 мм** в длину и **8 мм** в ширину.